STAHLWILLE®

Adaptors, metric

447

Product no.	**02181007**
GTIN	**4018754139125**
Model	**447 7**

Label. Adaptors 7mm Internal square drive 3/8"

Properties.

- bi-hex with AS-Drive profile
- HPQ® high-performance steel, gunmetal finish

Technologies and features.

High Performance Quality (HPQ®)
Our HPQ® tool is made of wear-resistant high-performance steel, yet is thin-walled and lightweight. It withstands high torques and is ideal for work in confined spaces such as turbines.

Technical drawing.

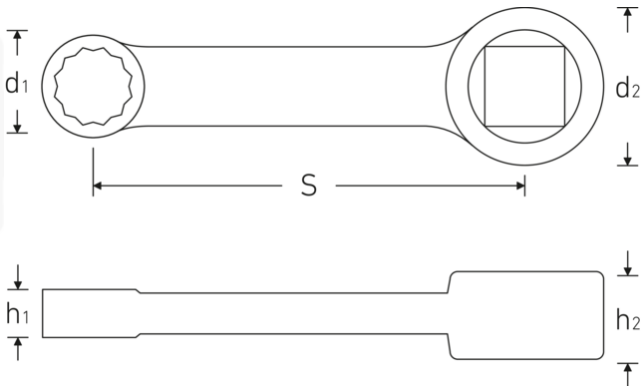

Technical attributes.

Size [mm]	7 mm
Height mm (h1)	6 mm
Height mm (h2)	11 mm
d1	11,5 mm
d2	19 mm
Internal square [inch]	3/8 "
Alloy	HPQ® Hochleistungsstahl, brüniert
S	50,8 mm

Logistics data.

Product no.	02181007
GTIN	4018754139125
Weight (g)	30 g
Volume (packaged, dm3)	0.0495 dm3
Packing standard	1
WEEE/ElektroG	nicht ear-pflichtig
Customs tariff no.	82042000
Country of origin AWR	GERMANY
Region of origin	Nordrhein-Westfalen
Depth mm (IFS)	65
Width mm (IFS)	18
Height mm (IFS)	10
Weight (gross, kg)	0,035
Weight PAP (kg)	0,000
Weight PVC (kg)	0,002
Length (packaged, mm)	110
Width (packaged, mm)	30
Height (packaging, mm)	15

GTIN.

4 018754 139125

STAHLWILLE Eduard Wille GmbH
Lindenallee 27 · 42349 Wuppertal · Germany · Phone: +49 202 4791-0
info@stahlwille.de · www.stahlwille.com
© STAHLWILLE Eduard Wille GmbH, Wuppertal