STAHLWILLE®

Adaptors, inch

447a

Product no.	**02470034**
GTIN	**4018754136421**
Model	**447a 9/16**

Label. Adaptors 9/16" Internal square drive 3/8"

Properties.

- bi-hex with AS-Drive profile
- SAE AS 954-E
- HPQ® high-performance steel, gunmetal finish

Technologies and features.

High Performance Quality (HPQ®)
Our HPQ® tool is made of wear-resistant high-performance steel, yet is thin-walled and lightweight. It withstands high torques and is ideal for work in confined spaces such as turbines.

Technical drawing.

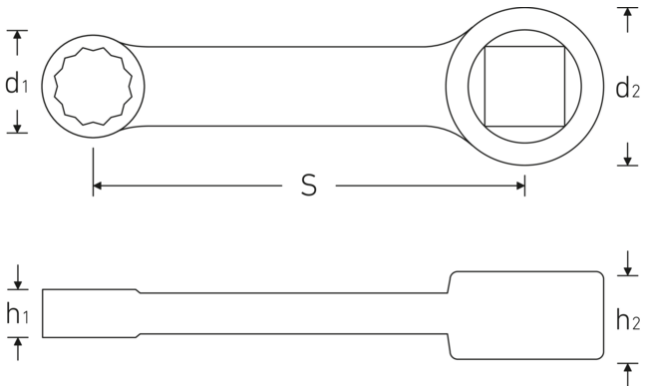

Technical attributes.

Size [inch]	9/16 "
Height mm (h2)	11 mm
d1	21 mm
d2	19 mm
Internal square [inch]	3/8 "
Alloy	HPQ® Hochleistungsstahl, brüniert
S	50,8 mm

Logistics data.

Product no.	02470034
GTIN	4018754136421
Weight (g)	61 g
Volume (packaged, dm3)	0.014 dm3
Packing standard	1
WEEE/ElektroG	nicht ear-pflichtig
Customs tariff no.	82042000
Country of origin AWR	GERMANY
Region of origin	Nordrhein-Westfalen
Depth mm (IFS)	70
Width mm (IFS)	20
Height mm (IFS)	10
Weight (gross, kg)	0,061
Weight PAP (kg)	0,000
Weight PVC (kg)	0,002
Length (packaged, mm)	70
Width (packaged, mm)	20
Height (packaging, mm)	10

GTIN.

4 018754 136421

STAHLWILLE Eduard Wille GmbH
Lindenallee 27 · 42349 Wuppertal · Germany · Phone: +49 202 4791-0
info@stahlwille.de · www.stahlwille.com
© STAHLWILLE Eduard Wille GmbH, Wuppertal