STAHLWILLE®

Adaptors

447aSP

Product no.	**02480024**
GTIN	**4018754133239**
Model	**447aSP 3/8 Spline**

Label. Adaptors 3/8" Internal square drive 3/8"

Properties.

- for external Spline-Drive screws
- MS-33787, MIL-W-8982
- HPQ® high-performance steel, gunmetal finish

Technologies and features.

High Performance Quality (HPQ®)
Our HPQ® tool is made of wear-resistant high-performance steel, yet is thin-walled and lightweight. It withstands high torques and is ideal for work in confined spaces such as turbines.

Technical drawing.

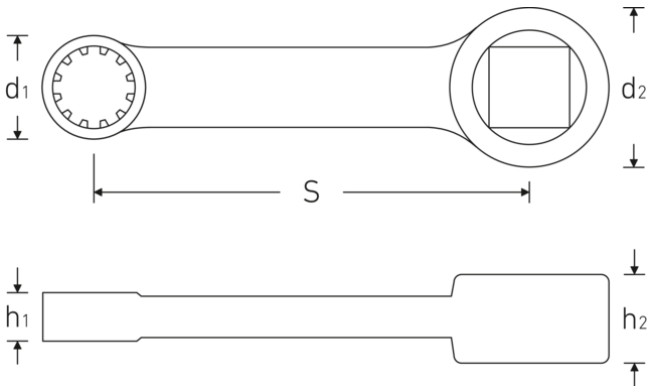

Technical attributes.

Size [inch]	3/8 "
Height mm (h1)	8 mm
Height mm (h2)	11 mm
d1	14,9 mm
d2	19 mm
Internal square [inch]	3/8 "
Alloy	HPQ® Hochleistungsstahl, brüniert
S	50,8 mm

Logistics data.

Product no.	02480024
GTIN	4018754133239
Weight (g)	38 g
Volume (packaged, dm3)	0.066 dm3
Packing standard	1
WEEE/ElektroG	nicht ear-pflichtig
Customs tariff no.	82042000
Country of origin AWR	GERMANY
Region of origin	Nordrhein-Westfalen
Depth mm (IFS)	67
Width mm (IFS)	19
Height mm (IFS)	11
Weight (gross, kg)	0,047
Weight PAP (kg)	0,000
Weight PVC (kg)	0,002
Length (packaged, mm)	100
Width (packaged, mm)	60
Height (packaging, mm)	11

GTIN.

4 018754 133239

STAHLWILLE Eduard Wille GmbH
Lindenallee 27 · 42349 Wuppertal · Germany · Phone: +49 202 4791-0
info@stahlwille.de · www.stahlwille.com
© STAHLWILLE Eduard Wille GmbH, Wuppertal