STAHLWILLE®

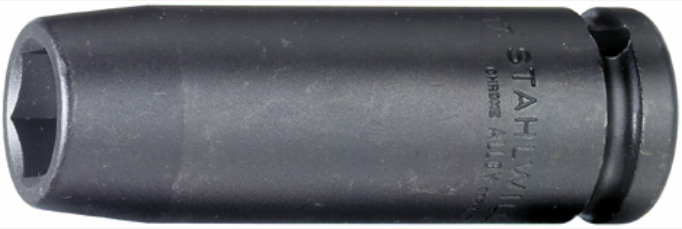

IMPACT sockets 1/2"

51IMP

Product no.	**23020015**
GTIN	**4018754158126**
Model	**51 IMP 15**

Label. IMPACT socket 1/2 " 15mm L.85mm

Properties.

- deep version
- with hex
- 1/2" internal square drive
- Chrome Alloy Steel, gunmetal finish
- DIN 3129 / ISO 1711-2

Product highlights.

Optimised functionality.
All IMPACT sockets have a through cross hole for the connecting pin and a deep groove for the rubber locking ring. The locking pin is not stressed during use.

High fitting accuracy.
The high fitting accuracy due to tight tolerances guarantees optimum, backlash-free transmission of forces to the socket.

Technical drawing.

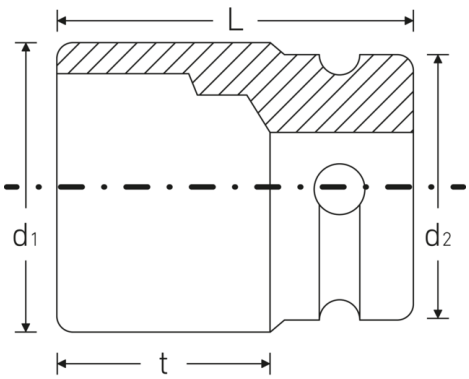

Technical attributes.

Size [mm]	15 mm
Square drive inner (inch)	1/2 "
Length mm (L)	85 mm
Drive profile	hex
d1	23,5 mm
d2	30 mm
t	68 mm

Logistics data.

Product no.	23020015
GTIN	4018754158126
Weight (g)	340 g
Volume (packaged, dm3)	0.6975 dm3
Packing standard	5
WEEE/ElektroG	nicht ear-pflichtig
Customs tariff no.	82042000
Country of origin AWR	GERMANY
Region of origin	Nordrhein-Westfalen
Depth mm (IFS)	85
Width mm (IFS)	31
Height mm (IFS)	31
Weight (gross, kg)	1,710
Weight PAP (kg)	0,000
Weight PVC (kg)	0,009
Length (packaged, mm)	150
Width (packaged, mm)	150
Height (packaging, mm)	31

GTIN.

4 018754 158126

STAHLWILLE Eduard Wille GmbH
Lindenallee 27 · 42349 Wuppertal · Germany · Phone: +49 202 4791-0
info@stahlwille.de · www.stahlwille.com
© STAHLWILLE Eduard Wille GmbH, Wuppertal