STAHLWILLE®

Battery terminal pullers

11040

Product no.	**71120012**
GTIN	**4018754172825**
Model	**11040/2**

Label. Battery terminal puller Clamping w.10-70mm x Clamping d.65mm

Properties.

- two-armed, with a self-centring quick-action clamp and automatic feed
- for battery terminal clamps, smaller ball bearings, pulleys etc.
- for narrow, hard-to-reach spaces
- as force is applied through the spindle, the extractor hooks automatically apply increasing force to the part being extracted
- particularly suited to car electrics, compressed air system repairs and similar applications due to the compact design and small hooks
- zinc plated

Product highlights.

Adapted access geometry.
Heavy-duty puller hooks made of oil-hardened Chrome Alloy Steel with special access geometry for tight spaces. Custom radii for shafts and axes.

Technical drawing.

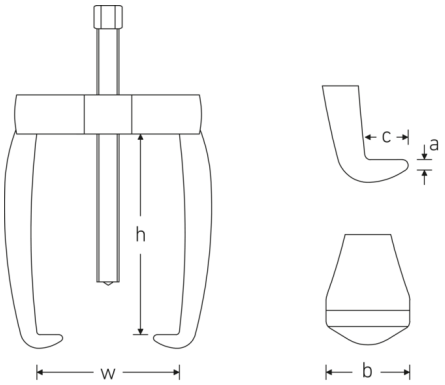

Technical attributes.

Size	2
External hex drive (mm)	12 mm
Number of hooks	2
max. load	3,0 t
max. torque	35 N·m
Clamping depth (h) mm	65 mm
Span mm (w)	10-70 mm
Spindle thread size	M10 x 110
Hook base width mm (b)	11 mm
Hook foot depth mm (c)	11 mm
Thickness of hook base tip mm (a)	2,5 mm

Logistics data.

Product no.	71120012
GTIN	4018754172825
Weight (g)	261 g
Volume (packaged, dm3)	0.3888 dm3
Packing standard	1
WEEE/ElektroG	nicht ear-pflichtig
Customs tariff no.	82055980
Country of origin AWR	GERMANY
Region of origin	Nordrhein-Westfalen
Depth mm (IFS)	120
Width mm (IFS)	66
Height mm (IFS)	25
Weight (gross, kg)	0,301
Weight PAP (kg)	0,026
Weight PVC (kg)	0,000
Length (packaged, mm)	150
Width (packaged, mm)	96
Height (packaging, mm)	27

GTIN.

4 018754 172825

Images.

STAHLWILLE Eduard Wille GmbH
Lindenallee 27 · 42349 Wuppertal · Germany · Phone: +49 202 4791-0
info@stahlwille.de · www.stahlwille.com
© STAHLWILLE Eduard Wille GmbH, Wuppertal