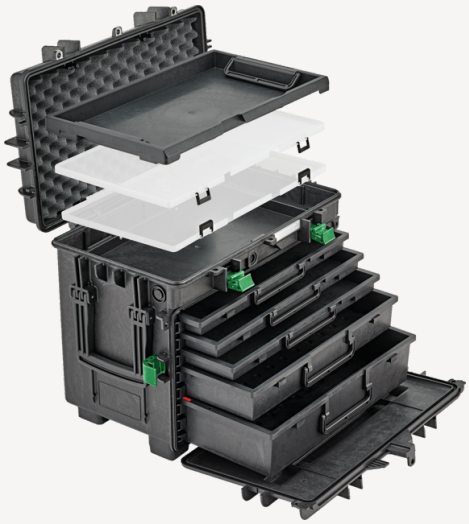

Tool trolley

13217 TS

Product no.	**81091306**
GTIN	**4018754240173**
Model	**13217 TS**

Label. Tool trolley 13217 TS deep black

Properties.

- robust and durable tool trolley made from polypropylene for professional use
- 5 easily removable lockable drawers with transparent covers, end-stops for the rails, and in 3 different drawer heights
- drawers can be inserted in any order
- with 1 top cover and 1 removable front cover
- the top lid is lined with dimpled foam to hold the tools securely in place
- 1 removable tray with 2 handles and 2 transparent drawer lids under the top tray
- drawers can be used as a separate toolbox thanks to the transparent lids
- custom label options for the case and the drawers
- 2 smooth-running double castors at the rear
- for upright transport on 4 wheels; can be fitted with wheel set R 13217 (please order separately)
- extendable telescopic handle for easy transport
- 2 side handles
- resistant to skydrol, acetone, petrol and hydraulic oils
- load capacity: 60 kg
- lockable in 3 places with a padlock
- lockable with the integrated lock, 2 keys included (excluding IP67 version)
- also available in IP67 (6 drawers, 4 x 30 mm, 2 x 60 mm).
- additional fasteners and seals protect against water and dust
- with valve for pressure compensation (IP67 version only)
- also available with all-round reflective decals (5 drawers, 2 x 30 mm, 3 x 60 mm), for increased safety when working in dark environments
- individual case configurations on request

Benefits.

Heavy-duty tool trolley made of sturdy polypropylene with telescopic and carrying handles - easy to transport and can hold up to 60 kg.

Reliable use in the workshop or on site - optimal for mechanics, machine setters, fitters and technicians.

5 drawers can be removed individually, used as separate tool boxes and arranged flexibly in any order.

Models from 2025 onwards offer additional storage space thanks to a lid with rail guide and the patented LOCK-UNLOCK system for the 13261 and 13262 top cases.

The trolley is resistant to skydrol, acetone, petrol and hydraulic oils.

Product highlights.

Reliable and always at hand.
Whether in the workshop, on assembly or between aisles in the industrial hall - our toll trolley goes wherever you go. With a sturdy telescopic handle, 2 side carrying handles and smooth-running castors, it can be moved effortlessly - and reliably carries up to 60 kg.

Organisation that thinks for itself.
The removable drawers are lockable and can therefore also be used as individual boxes. They can be individually equipped with our TCS mats. Thanks to the pull-out stop and free arrangement, everything stays where it belongs. On top, a removable shelf with handles and drawer lids ensures quick access to frequently used parts.

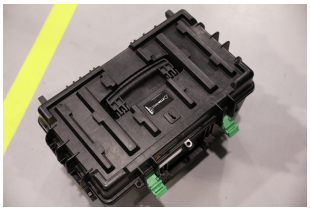

Made for the toughest jobs.
Whether oil, chemicals or dirt - our case remains steadfast. It is resistant to Skydrol, acetone, petrol and hydraulic oils. With water- and dust-protected closures, it is also ideally equipped for harsh industrial applications.

Well equipped.
Our trolleys are of course also available with matching tool sets. However, we are also happy to put together sets according to customer requirements for individual needs. Just get in touch with us.

More storage space, cleverly combined.
From model year 2025 onwards, there will be even more space: thanks to the new lid rail guide and the practical LOCK-UNLOCK system, matching top cases such as 13261 TS and 13262 TS can be easily attached and securely connected. A simple flick of the lever is all it takes to get the module ready for use. And best of all, older models can also be easily retrofitted with the appropriate lid. Everything in a modular system - for maximum organisation and flexibility.

Technical drawing.

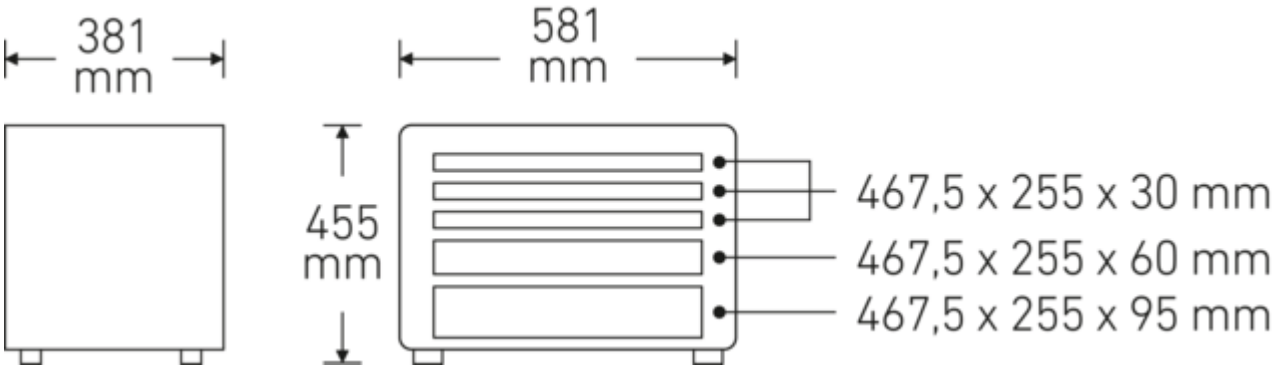

Technical attributes.

Model No.	13217 TS
Length mm (L)	381 mm
Width mm (b)	581 mm
Height mm (h)	455 mm
Number of drawers	3 x H. 30 mm, 1 x H. 60 mm, 1 x H. 95 mm
Colour	deep black

Logistics data.

Product no.	81091306
GTIN	4018754240173
Weight (g)	16000 g
Volume (packaged, dm3)	127.92 dm3
Packing standard	1
WEEE/ElektroG	nicht ear-pflichtig
Customs tariff no.	42021250
Country of origin AWR	ITALY
Region of origin	Ausländischer Ursprung
Depth mm (IFS)	600
Width mm (IFS)	405
Height mm (IFS)	520
Weight (gross, kg)	16,100
Weight PAP (kg)	1,500
Weight PVC (kg)	0,000
Length (packaged, mm)	600
Width (packaged, mm)	410
Height (packaging, mm)	520

GTIN.

4 018754 240173

Accessories (for).

96894805
Wheel set

77210002
Padlock

Spare part(s), spare part(s) for.

PRODUCT IMAGE IN PROGRESS

90432790
Spare parts

90432907
Trolley lid

PRODUCT IMAGE IN PROGRESS

90432687
Spare parts

PRODUCT IMAGE IN PROGRESS

90432688
Spare parts

PRODUCT IMAGE IN PROGRESS

90432689
Spare parts

PRODUCT IMAGE IN PROGRESS

90432737
Drawer pull-out protection

PRODUCT IMAGE IN PROGRESS

90432645
Spare parts

PRODUCT IMAGE IN PROGRESS

90432685
Spare parts

PRODUCT IMAGE IN PROGRESS

90432581
Spare parts

PRODUCT IMAGE IN PROGRESS

90432578
Spare parts

PRODUCT IMAGE IN PROGRESS

90432633
Spare parts

PRODUCT IMAGE IN PROGRESS

90432579
Spare parts

PRODUCT IMAGE IN PROGRESS

90432631
Spare parts

90432580
Telescopic handle

89010100
Transparent cover

81483230
Drawer

81483260
Drawer

81483295
Drawer

90432767
Front lid

Images.

STAHLWILLE Eduard Wille GmbH
Lindenallee 27 · 42349 Wuppertal · Germany · Phone: +49 202 4791-0
info@stahlwille.de · www.stahlwille.com
© STAHLWILLE Eduard Wille GmbH, Wuppertal