Electronic workshop testing devices SENSOTORK®

7707-2W

Product no.	**96521072**
GTIN	**4018754155781**
Model	**7707-2W**

Label.

Electronic workshop testing device SENSOTORK® Measuring r.2-100N·m Internal square drive 3/8"

Properties.

- for testing indicating and clicking type torque wrenches
- compact electronic testing device consisting of:

1 patented transducer
1 safety lock
1 display
1 stand with 1.5 metre cable for the display unit
1 spiral cable
1 power supply (110-230 V with interchangeable power outlet adaptors)
interchangeable square drive adaptors

- large LCD for optimum readability
- horizontal or vertical orientation
- for controlled clockwise and counter-clockwise measurements
- 3 operating modes: running display of the applied torque (Track), display of the torque on click point detection (First-Peak), peak value display (Peak-Hold)
- for clicking type torque wrenches, the actual final torque applied is also displayed, in addition to the first peak
- with QuickRelease safety lock
- not affected by transverse forces due to its particularly low-profile design
- automatic detection of transducers
- particularly broad measurement range from about 2-100 % of the nominal value
- 3 measuring units (N·m, ft·lb, in·lb)
- software no. 7759-4, including USB adaptor and jack-push/pull cable, allows the measured values to be transmitted to a PC (no additional external power source required, power from the PC), not included, order separately (see page 51)
- when recalibrating a transducer, the test equipment remains on site and available for use with another transducer
- complies with the specifications of guideline DKD-R 10-8
- with factory certificate
- delivered in a sturdy plastic box
- **accuracy ± 1%**

Benefits.

Electronic workshop testing device for checking and adjusting indicating and setting torque wrenches.

Measurement in the large torque range up to 1,100 N·m.

The interchangeable square adaptors stored in the base allow flexible use with standard square drive sizes.

Simple, quick and reliable testing of torque wrenches to ensure quality in production.

Simple changing of transducers enables quick adjustment to different measuring tasks and specific testing requirements.

Product highlights.

PRODUCT IMAGE IN PROGRESS

Flexible mounting.
Whether mounted horizontally or vertically - the well-designed mounting points, compact design and rotatable display allow flexible positioning anywhere in the workshop.

PRODUCT IMAGE IN PROGRESS

Customised drive solution.
Up to 4 square adapters are integrated into the mounting block of the device, within easy reach, to enable flexible use with standard square drive sizes.

PRODUCT IMAGE IN PROGRESS

Adaptive measuring system.
Our SENSOTORK® 7707W features easily interchangeable transducers. This gives it the ability to be customised for individual measurement requirements.

Resistance to transverse forces.
The high level of accuracy is achieved by flat transducers and a special technology for immediate data processing directly in the transducer. Thanks to an integrated measurement amplifier, the testing device is resistant to bending moments and transverse forces.

Technologies and features.

QuickRelease
The QuickRelease safety lock helps you to quickly mount and change transducers. The sensors lock into the calibration system adaptor and only unlock again at the push of a button.

DIN EN ISO 6789-2
Our torque wrenches and torque screwdrivers are professionally calibrated in accordance with DIN EN ISO 6789-2 and delivered with a corresponding calibration certificate. We also calibrate angle-controlled torque wrenches in accordance with VDI 2648-2. This ensures the accuracy and traceability of our tools.

Technical drawing.

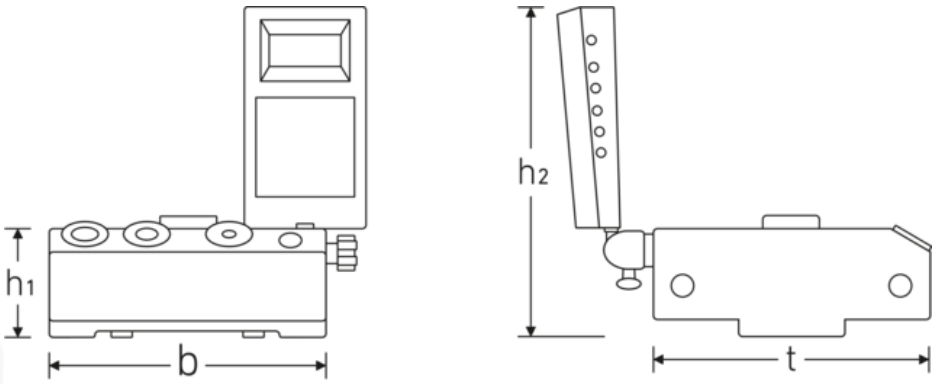

Technical attributes.

Anzeigeabweichung	± 1%
Model No.	7707-2W
Measuring range N·m	2-100 N·m

Logistics data.

Product no.	96521072
GTIN	4018754155781
Weight (g)	7025 g

MA N·m	2 N·m
Nominal value N·m	100 N·m
Width mm (b)	180 mm
Height mm (h1)	79 mm
Height mm (h2)	215 mm
Internal square [inch]	3/8 "
t	180 mm
Weight with box	10300 g

Volume (packaged, dm3)	24.854 dm3
Packing standard	1
WEEE/ElektroG	Kleingeräte B2C
Customs tariff no.	90318080
Country of origin AWR	GERMANY
Region of origin	Nordrhein-Westfalen
Depth mm (IFS)	430
Width mm (IFS)	340
Height mm (IFS)	170
Weight (gross, kg)	9,680
Weight PAP (kg)	0,016
Weight PVC (kg)	0,000
Length (packaged, mm)	430
Width (packaged, mm)	340
Height (packaging, mm)	170

Parts list.

11030010
Square drive adaptor

52100050
Display

52100051
Body mount

52100058
Torque wrench screws

52100059
Torque wrench screws

52110051
Jack cable

52110052
Jack cable

52110056
Power supply

81320002
Plastic case

GTIN.

4 018754 155781

STAHLWILLE Eduard Wille GmbH
Lindenallee 27 · 42349 Wuppertal · Germany · Phone: +49 202 4791-0
info@stahlwille.de · www.stahlwille.com
© STAHLWILLE Eduard Wille GmbH, Wuppertal