Spare Parts Catalogue

PX8000-TRIFASE

Generating sets

Valid for machine code:
PK472TXB000 Revision: 0 (06/2013)

Copyright 2021 Pramac, All Rights Reserved.

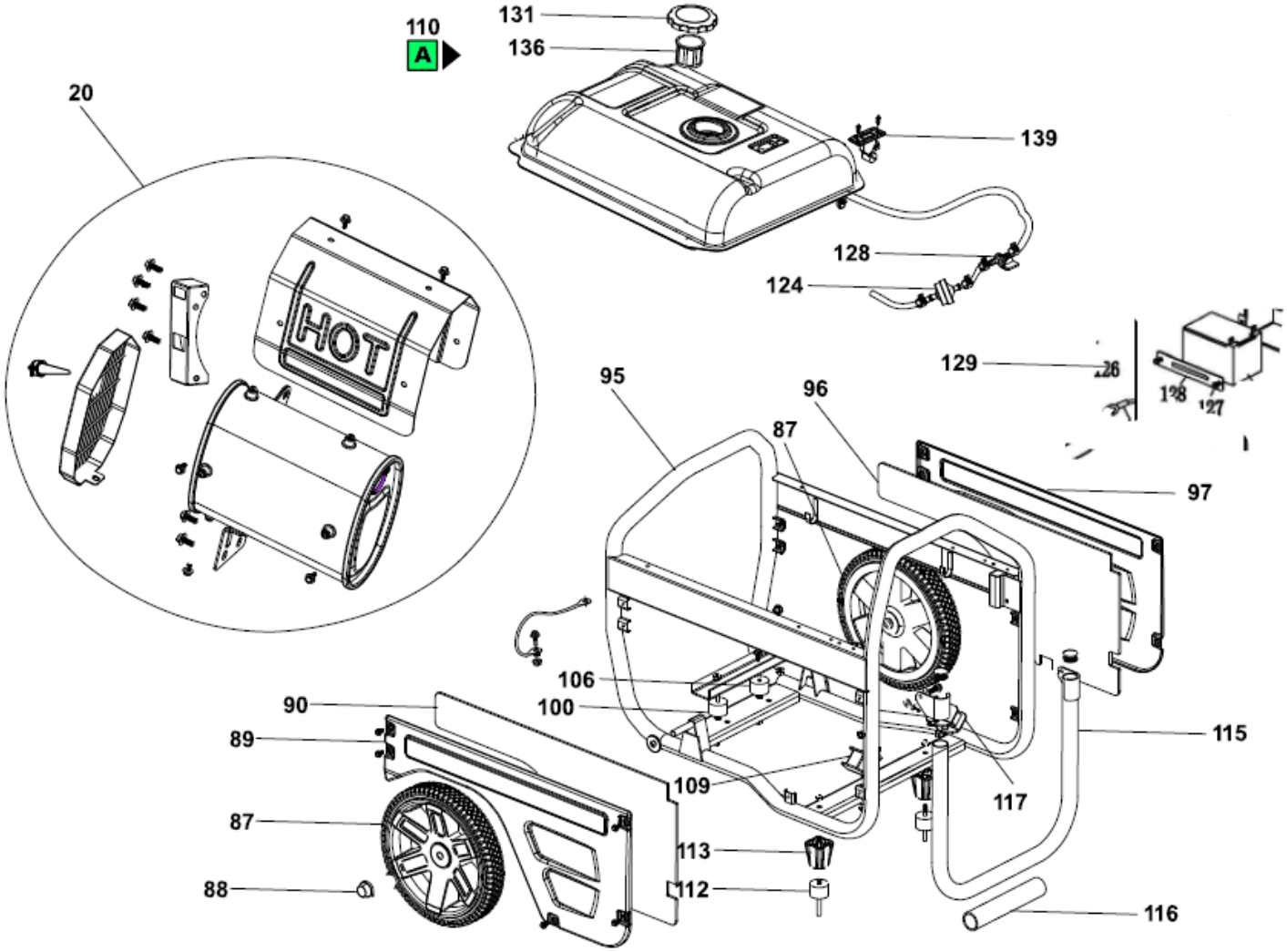
110
A
131
136
20
139
128
124
129
126
128
127
95
96
87
97
106
100
90
89
87
88
109
113
112
115
117
116
HOT

POSITION	PART NUMBER	DESCRIPTION	NOTES
20	PAA00101	MUFFLER ASSEMBLY PX8000	
86	PAA00541	Washer fixation ,wheel axle	
87	PAA00118	WHEEL ASSY 5000/8000	
88	PAA00122	WHEEL HUB CAP 4000/5000/8000	
89	PAA00115	SIDE COVER/MUFFLER SIDE 5000/8000	
90	PAA00114	SIDE COVER FOAM/MUFFLER SIDE 5000/8000	
95	PAA8000F	FRAME ASSY ENGINE GREEN PRAMAC	
96	PAA00116	SIDE COVER FOAM/ALTERNATOR SIDE 5000/8000	
97	PAA00117	SIDE COVER/ALTERNATOR SIDE 5000/8000	
100	PAA00119	SILENT BLOCK STUD BOLT 5000/8000	
106	PAA00120	SILENT BLOCK/SINGLE HEAD BOLT /DAMPING GLUE 5000/8000	
109	PAA00121	SILENT BLOCK A ENGINE 5000/8000	
110	SA40016052	FUEL TANK WITH SUPPLEMENTS	
112	G052956	RUBBER FEET 85 SH-A	
113	GA7021	FEET SUPPORT +NUT+SCREW	
115	PAA00111	HANDLE ASSY/PRAMAC GREEN ORANGE PEELED	
116	PAA00110	HANDLE FOAM SLEEVE	
117	PAA00121	SILENT BLOCK A ENGINE 5000/8000	
124	PEH16910-GB2-005	FUEL FILTER	
128	G085104	QUARTER TURN FUEL VALVE	
129	PAA80528	BATTERY	
131	G051521	SHELL FUEL CAP FOR METAL TANK - VENT HOLES ON TOP	
136	PAA00142	STRAINER FUEL 4000/5000/8000	
139	PAA00146	FUEL GAUGE TANK 4000/5000/8000	

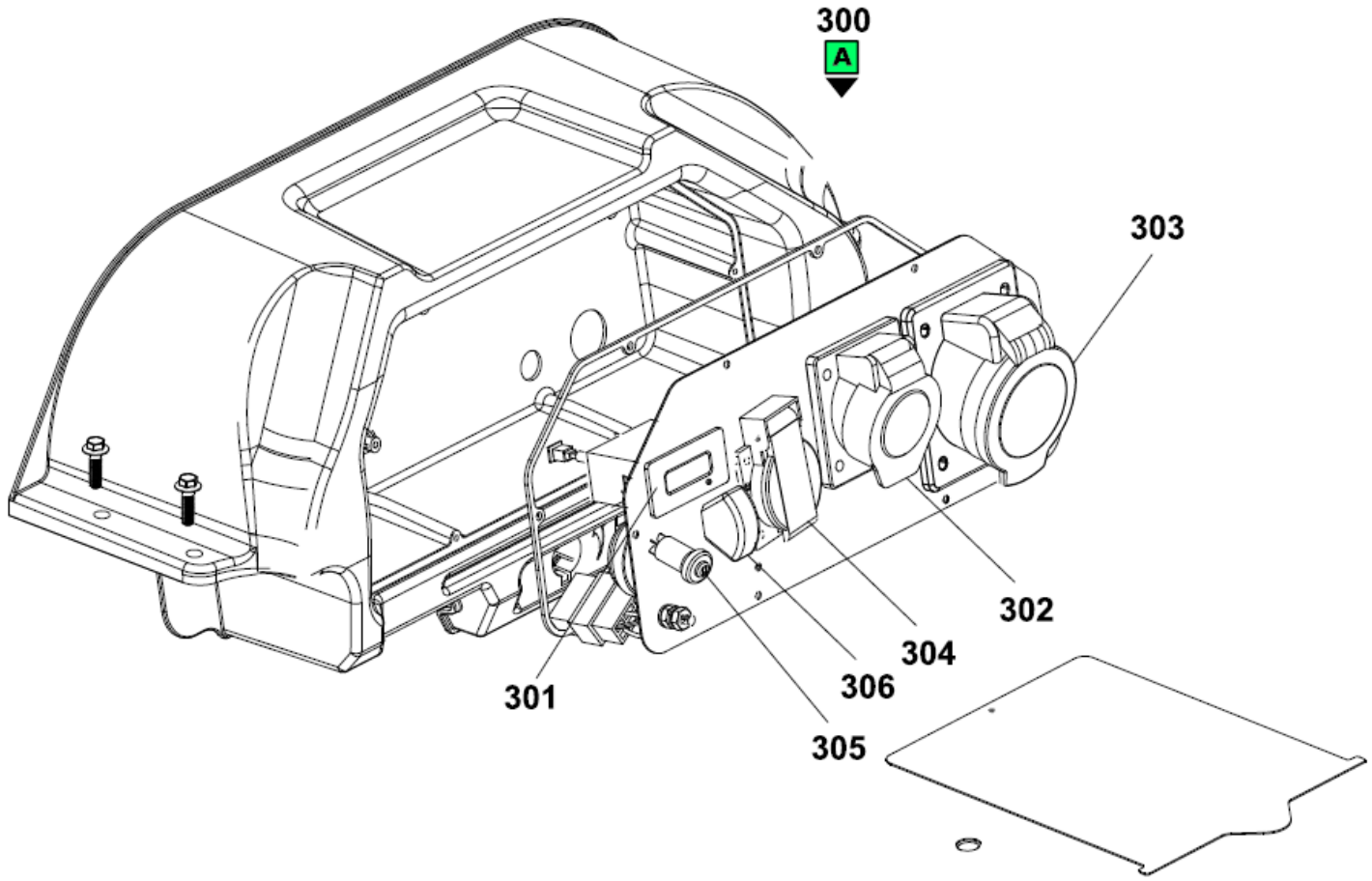
300
A
303
302
304
306
301
305

POSITION	PART NUMBER	DESCRIPTION	NOTES
300	PAA80005	PANEL SUBASSEMBLY, CONTROL TRIF	
301	G077014	DIGITAL MULTIMETER FOR PANEL (350V-450V) (50-60Hz)	
302	P3SN00055	SOCKET CEE IP44 32 A 2P+T 230V	
303	G071126	PANEL MOUNT SOCKET 3P+N+T 400V 16A IP44 CEE	
304	G071131	SOCKET SUBASSEMBLY, POWER SUPPLY	
305	PAA80007	START SWITCH KEY	
305	PGT00176	SWITCH ASSEMBLY	
306	PGT62049	BREAKER THREE-POLE	

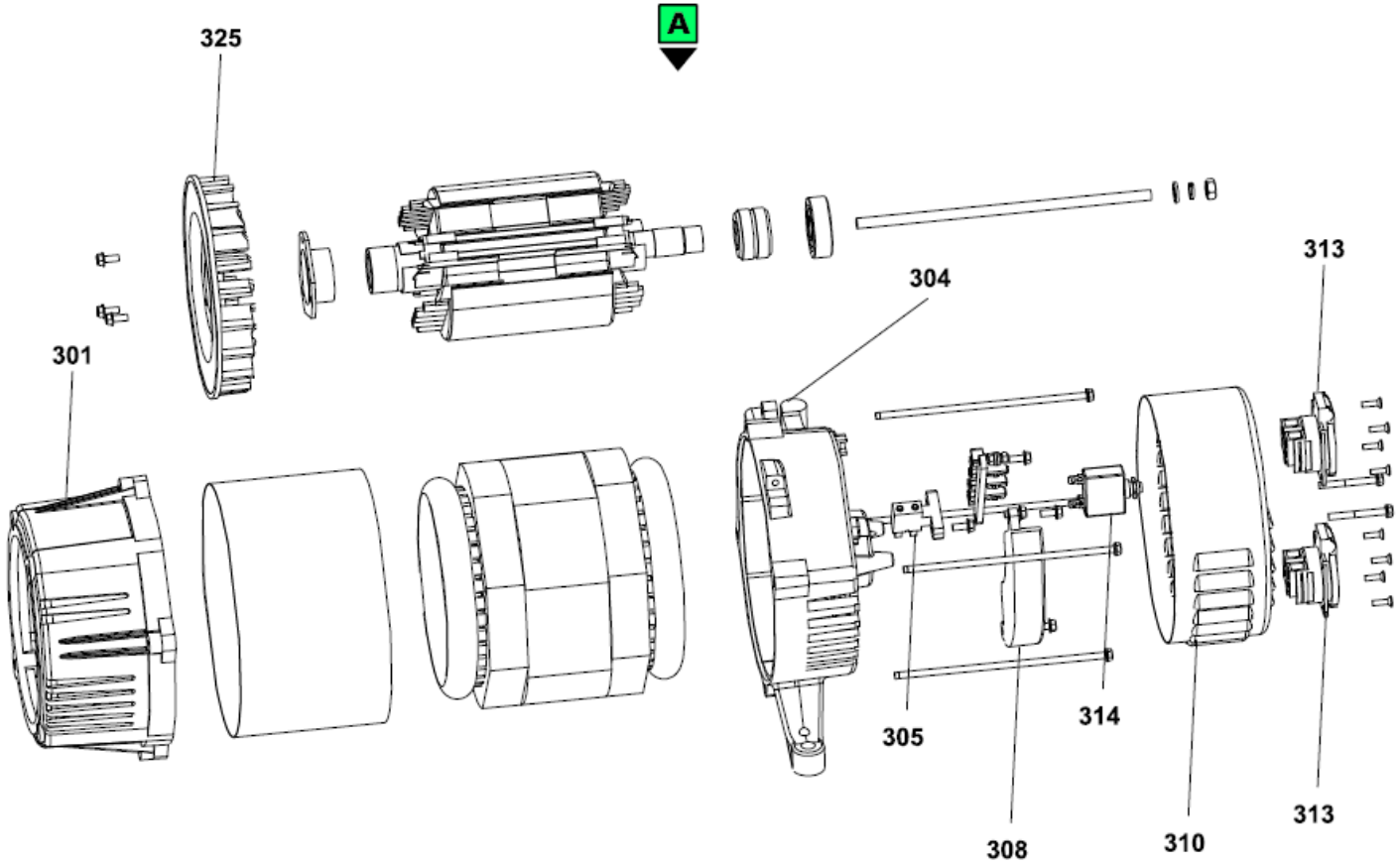
A
325
301
304
313
305
314
308
310
313

POSITION	PART NUMBER	DESCRIPTION	NOTES
401	PAA80008	AVR THREEPHASE PX8000	
402	PAA00103	ALTERNATOR END COVER 5000/8000	
403	PAA00104	BRUSH SUBASSEMBLY, CARBON 5000/8000	
404	PAA00105	BRACKET, MOTOR 5000/8000	
405	PAA8002A	COMPLETE ALTERNATOR THREE PHASE	

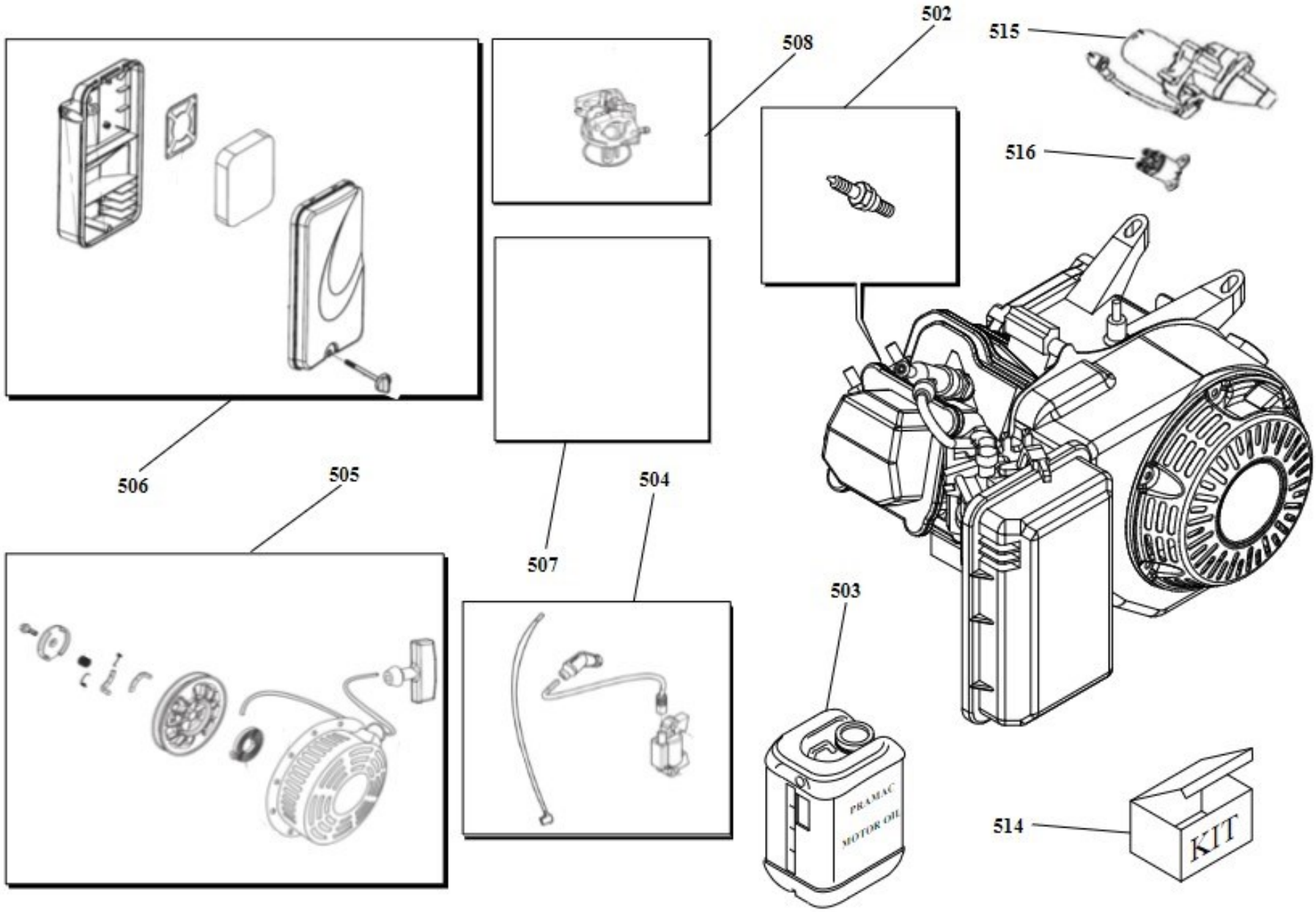
502
508
515
516
506
505
507
504
503
514
PRAMAC
MOTOR OIL
KIT

POSITION	PART NUMBER	DESCRIPTION	NOTES
502	PAA00500	PLUG SPARK 5000/8000	
503	P3KI00299	Kit Pramac Power	
504	PAA00525	IGNATION COIL ASSY 5000/8000	
505	PAA00521	STARTER ASSY 5000/8000	
506	PAA00506	COMPLETE AIR FILTER CASE 5000/8000	
507	PAA00513	SENSOR ENGINE OIL 5000/8000	
508	PAA00505	CARBURATOR ASSY 8000	
515	PAA80526	STARTING MOTOR ASSY	
516	PAA80527	STARTER RELAY	
517	PAA00531	FILTER COVER PX 5000/8000	

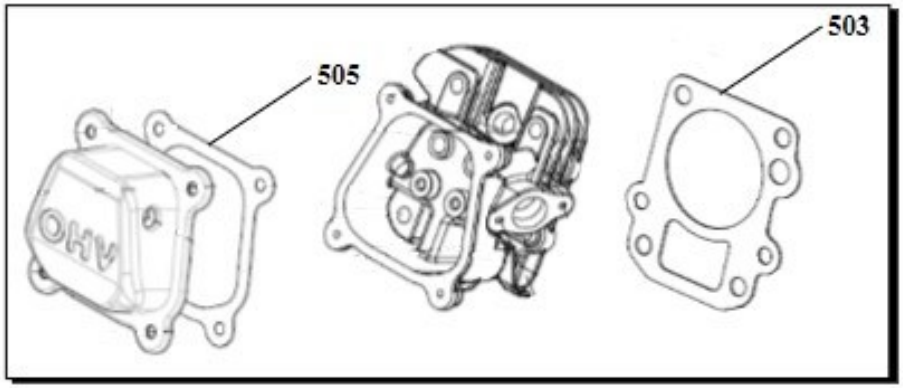
505
503
OHV

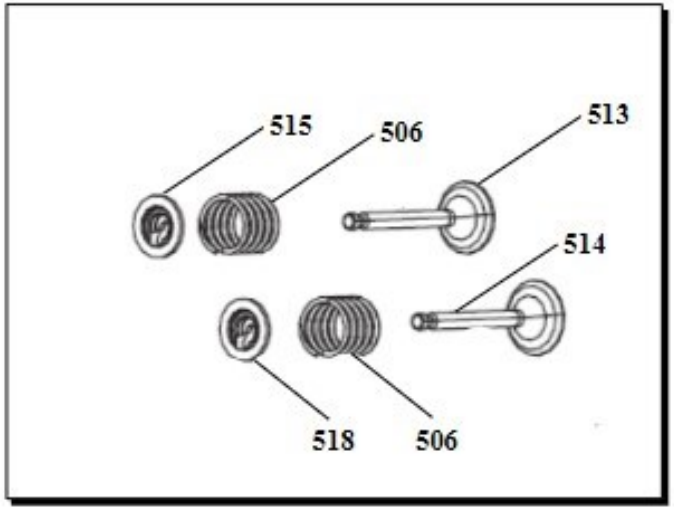
515
506
513
514
518
506

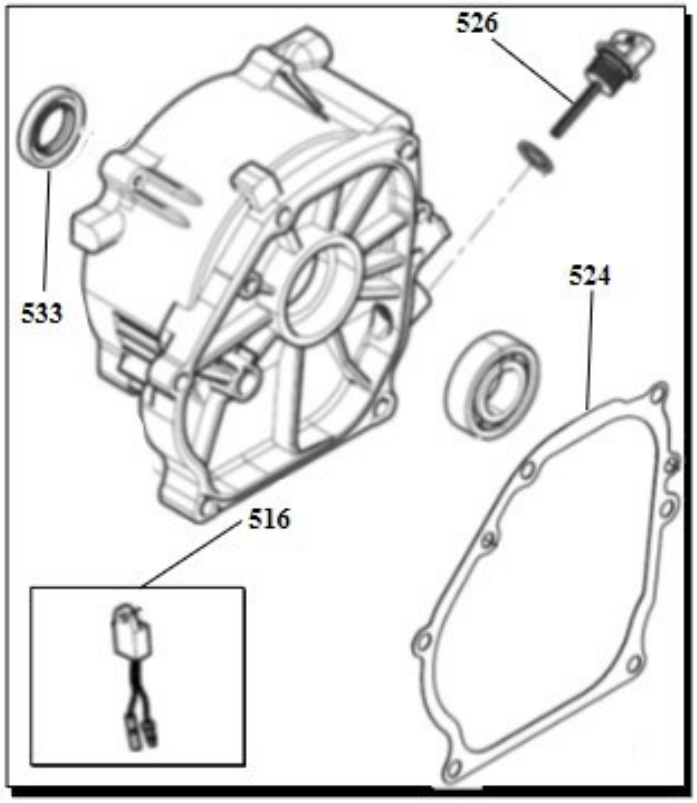
526
533
524
516


527


528

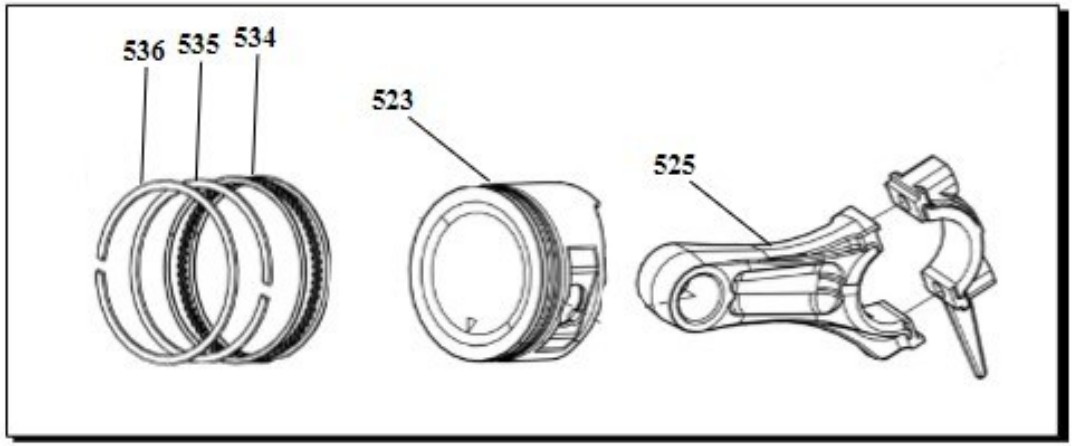
536
535
534
523
525

POSITION	PART NUMBER	DESCRIPTION	NOTES
503	PAA00507	GASKET CYLINDER HEAD 5000/8000	
505	PEH12391-ZE2-020	HEAD COVER GASKET GX390VXB	
506	PGT00513	SPRING VALVE 6200/6250/7000	
513	PAA00508	VALVE EXHAUST 5000/8000	
514	PAA00509	VALVE INTAKE 5000/8000	
515	PAA00503	EXHAUST VALVE SPRING RETAINER 5000/8000	
516	PAA00514	PROTECTOR OIL 5000/8000	
518	PAA00502	INLET VALVE SPRING RETAINER 5000/8000	
523	PAA80511	PISTON	
524	PAA00519	GASKET CARTER ENGINE 5000/8000	
525	PAA80512	ROD, CONNECTING	
526	PAA00518	OIL CAP 5000/8000	
527	PAA00515	SPRING GOVERNOR 5000/8000	
528	PAA00516	SPRING THROTTLE VALVE 5000/8000	
533	PAA00520	SEAL OIL 5000/8000	
534	PAA80510	RING SET, OIL KIT	
535	PAA80510	RING SET, OIL KIT	
536	PAA80510	RING SET, OIL KIT	
537	PAA00534	Cam shaft assy	