Spare Parts Catalogue

ES8000 +AVR-Single phase-230V-50Hz,Honda Engine Stage V,Hand start/Petrol

Generating sets

Valid for machine code: PE612SH1009
Revision: 0 (04/2021)

Copyright 2021 Pramac, All Rights Reserved.

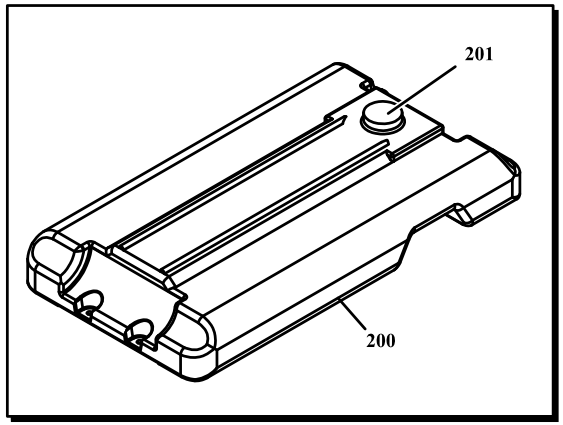
201
200


110

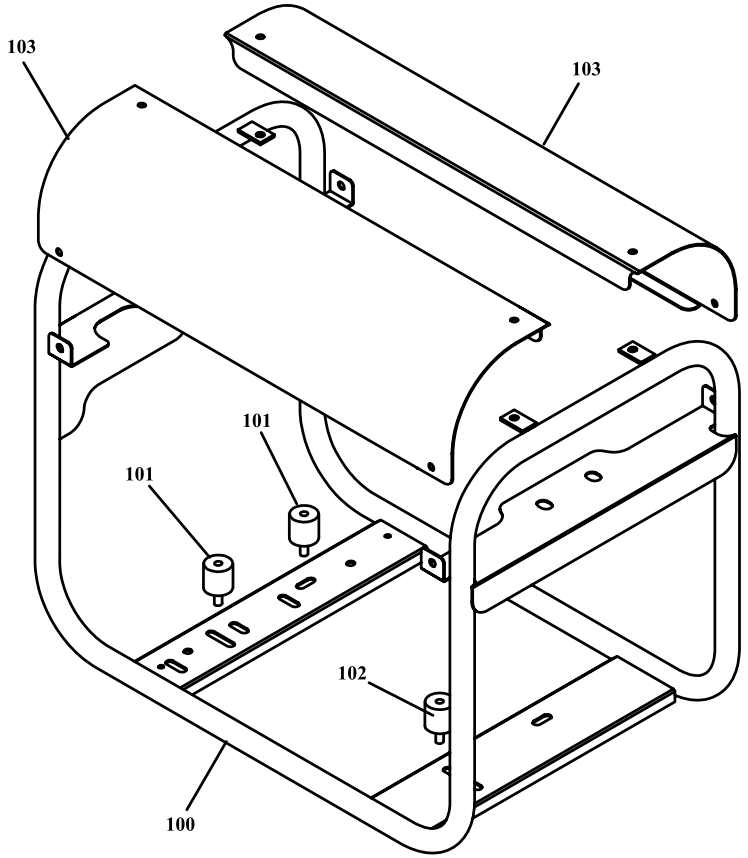
103
103
101
101
102
100

POSITION	PART NUMBER	DESCRIPTION	NOTES
100	VA40020003-9005O	COMPLETE FRAME ES 5/7/8000 *HHPI PAINTED	Attention: this item is valid for machines produced until 05/06/2012 Interchangeable: YES
100	VA40020016-9005B	COMPLETE FRAME PAINTED ES 5-7-8000	Attention: this item is valid for machines produced from 05/06/2012 until 18/09/2014 Interchangeable: YES
100	VA40020022-9005B	TELAIO ES 5/8000 VERNICIATO	Attention: this item is valid for machines produced from 18/09/2014 Interchangeable: YES
101	G052112	CYLINDRIC SILENT-BLOCK MF-30x30-M8x15-M8-60	
102	G052120	CYLINDRIC SILENT-BLOCK MF-40x40-M8x14-M8-45	
103	VA40020702-PRAMACB	SIDE COVER ES 5-7-8000 PAINTED	
110	G085104	QUARTER TURN FUEL VALVE	
200	G51398	FUEL TANK 11 LITERS	
201	G080215	FUEL CAP WITHOUT KEY - VENT HOLES ON TOP	

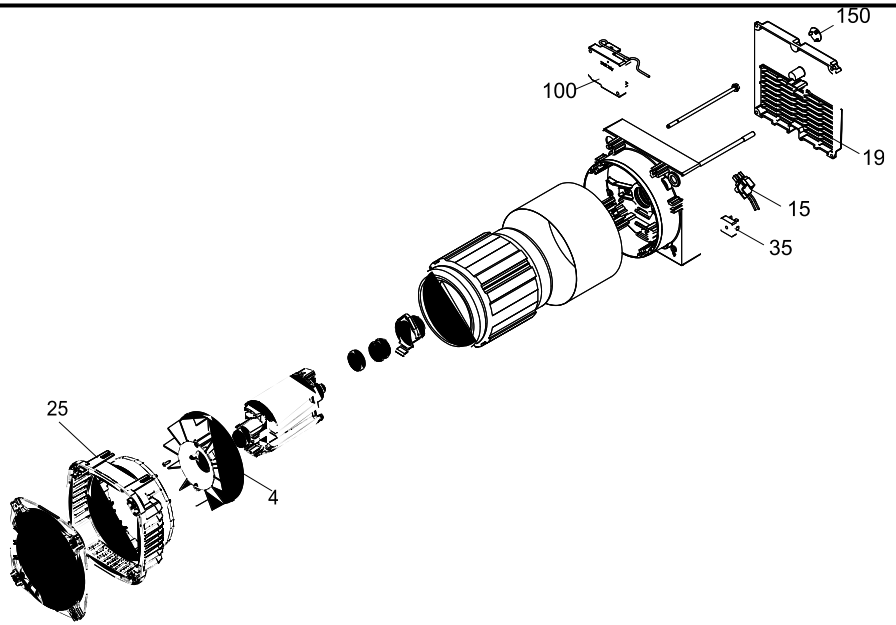
150
100
19
15
35
25
4

POSITION	PART NUMBER	DESCRIPTION	NOTES
4	PAN1VGA10003	FAN	
15	PAN00153	Portaspazzole per KR80 / KR100 con AVR525D (Part Number KVR0525D)	
19	PAN1GGA10011	BLIND COVER ALT. T100	
29	PAN00082	Scudo anteriore completo KR100	
35	PANKPD25A02	PONTE RADDRIZZATORE MONOFASE 15°-200V	
100	PAN00005	AVR KVR 0520	
150	PAN7PRTS0232	PLASTIC PLUG ES80	
300	ANS6000EB0ADBY	ALTERNATOR KR100G 6/115/230/50/3000 J609b - COVER 1 SCHUKO - 1 CEE 32A 230V + 2 C. BREAKER - IP23 - AVR-d - NSM	

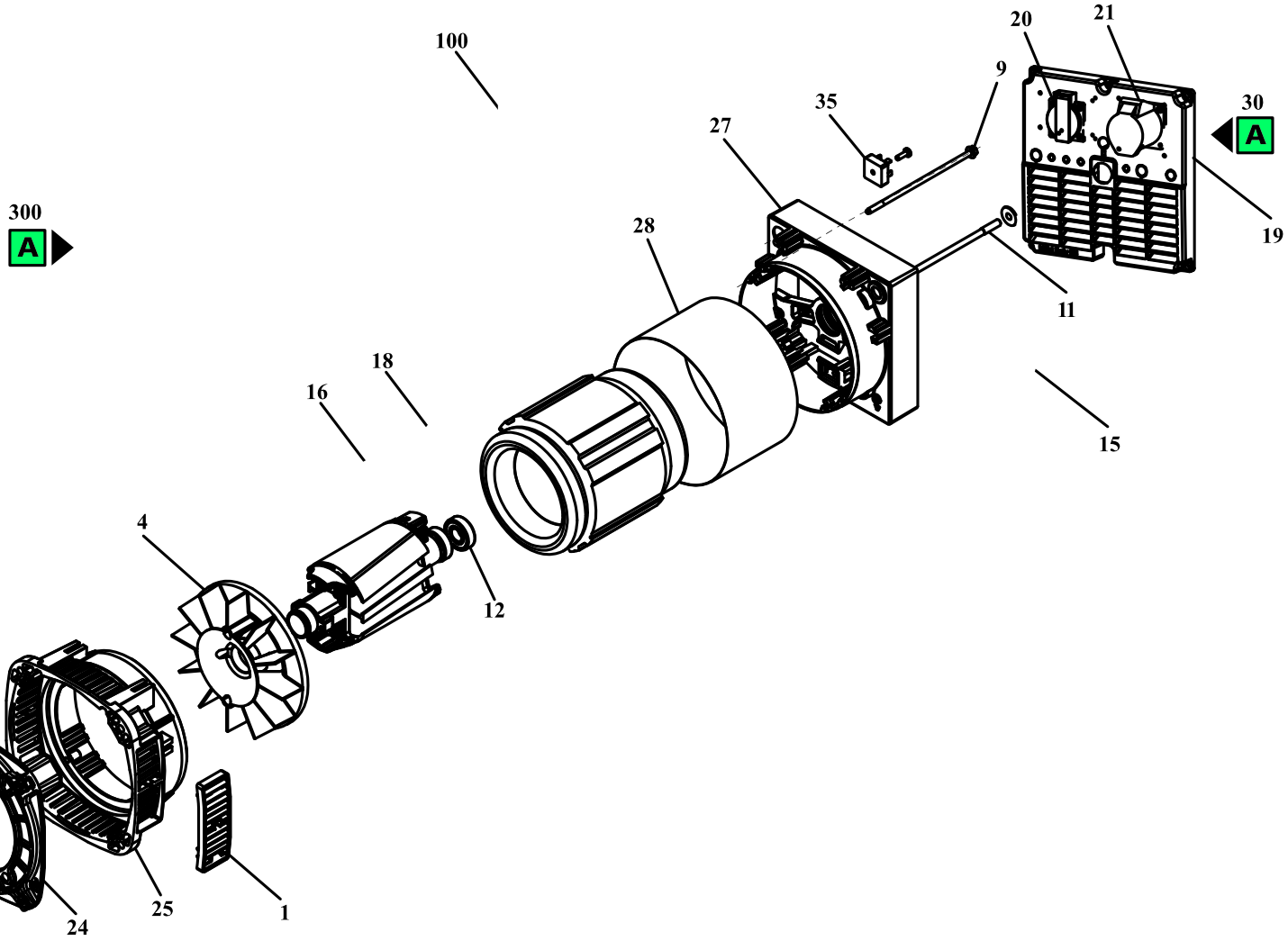
100
20
21
9
35
30
A
27
300
A
28
19
11
18
16
15
4
12
24
25
1

POSITION	PART NUMBER	DESCRIPTION	NOTES
4	PAN1VGA10003	FAN	
12	G10405	BEARING 6203 2RS	
15	PAN3PSM0408SR	PORTASPAZZOLE COMPLETO KR100/SR100	
16	PAN7COG040202	MANIFOLF KR100/SR100	
18	PAN1GGA10017	COPRI COLLETTORE KR100/SR100	
19	PAN1GGA100113	CCUFFIA ASPIRAZ.ARIA PRED.X SE-M-T100 1CEE 1 SCHUKOUFFIA PREDISPOSTA SE-M-T100	
20	G071131	SOCKET SUBASSEMBLY, POWER SUPPLY	
21	PAN00079	SOCKET CEE 1ph 32A 2P+EARTH	
21	PAN3FLA10010	FLANGIA ACCOPPIAMENTO J609B C22-25,4 SE100	
25	PAN00082	Scudo anteriore completo KR100	
27	PAN3SLA100164	SCUDO POSTERIORE KR100/SR100	
30	PAN00011	COVER SE100/K100 1 SHUKO + 1 CEE MF 32 A +DISG. 15 A+DISG.25 A	
35	PANKPD25A02	PONTE RADDRIZZATORE MONOFASE 15°-200V	
100	PAN00005	AVR KVR 0520	
300	ANS6000EB0ADBZ	ALTERNATOR KR100G 6/115/230/50/3000 J609b - COVER 1 SCHUKO - 1 CEE 32A 230V + 2 C. BREAKER - IP23 - AVR - NSM	

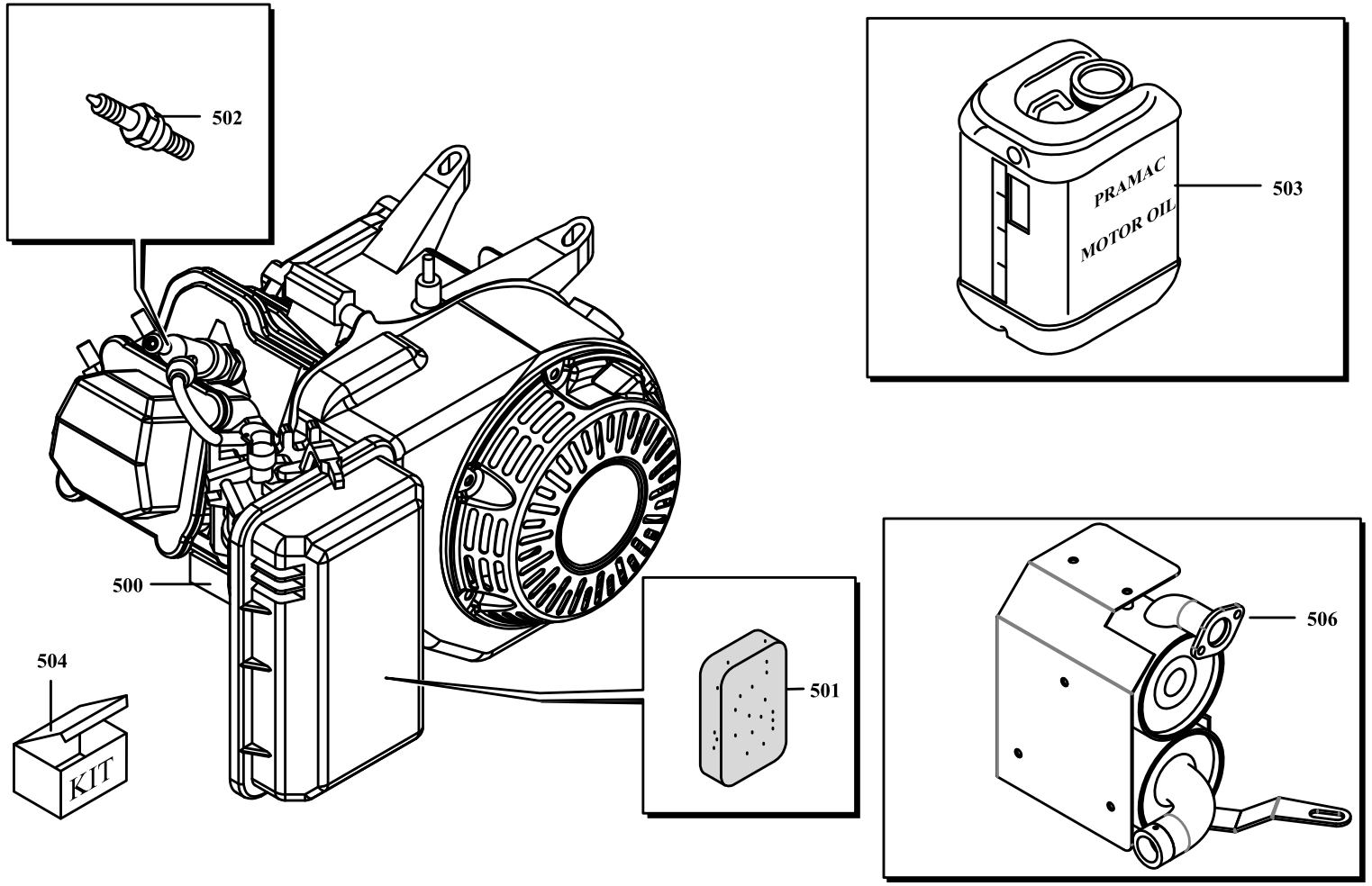
502
503
PRAMAC
MOTOR OIL
500
504
KIT
501
506

POSITION	PART NUMBER	DESCRIPTION	NOTES
500	EHA130BB22U	Engine Honda GX390T2 VPXP STAGE V Air_3000_Mech_J609b-_Handstart__Ver/Sp:	
501	PEH17211-899-000	AIR FILTER ELEMENT	
502	PEH98079-56876	SPARK PLUG	
504	P3KI00331	ES8000-S8000-SP8000 MAINTENANCE KIT	
506	VA40016008-9005O	COMPLETE PRAMAC MUFFLER PAINTED x GX390	