PRAMAC | Service & Parts

Spare Parts Catalogue

PY 20 S4 1150x540 * A * POLY.C - POLY.C +TIMONIERA MONTATA - GRIGIO RAL 9006 - LIFTER

Material Handling | **Manual Pallet Truck**

Valid for machine code: **TGA420UVM1M**

Revision: February 2024

PRAMAC

Copyright Pramac Group, All Rights Reserved

Handle Parts

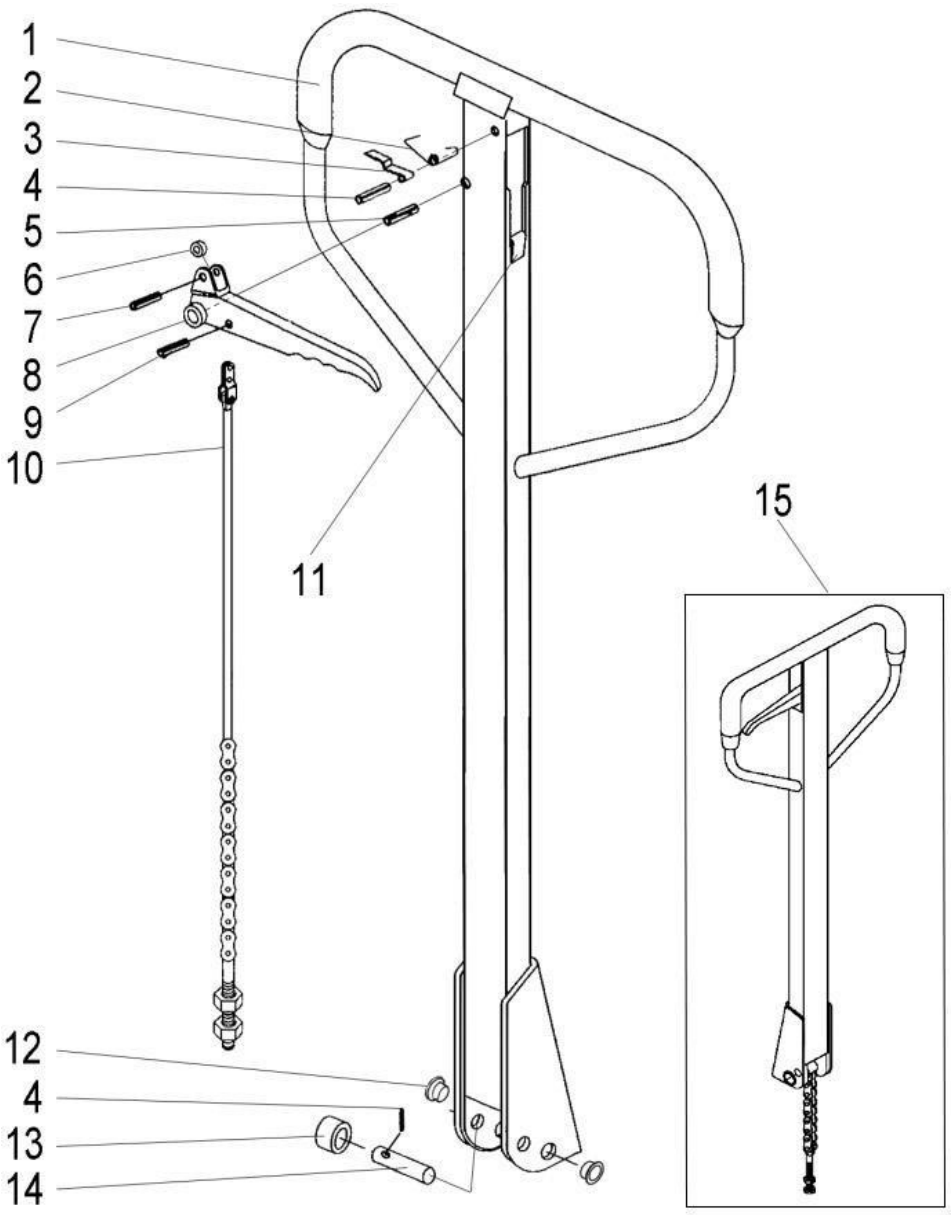

No	New P/N	PR CODE	Description
1	17010316	#N/A	Draw-bar
2	17010327	**PCD00047**	Torsional Spring
3	17010310	**PCD00048**	Blade Spring
4	17010311	**PCD00049**	Spring Pin 4x30
5	17010314	**PCD00050**	Spring Pin 6x30
6	17010312	**PCD00051**	Roller
7	17010313	**PCD00052**	Spring Pin 4x17
8	17010315	**PCD00053**	Control Handle
9	17010333	**PCD00054**	Spring Pin 4x13
10	17010335	**PCD00055**	Release rod & chain assy.
11	17010331	**PCD00056**	Rubber pad
12	17010325	**PCD00057**	Bushing 20*15
13	17010318	**PCD00058**	Pressure Roller 26*14*22
14	17010317	**PCD00059**	Roller Axle 12*60
15	17010101	**PCD00060**	Handle assy

Copyright Pramac Group, All Rights Reserved

Truck chasis parts

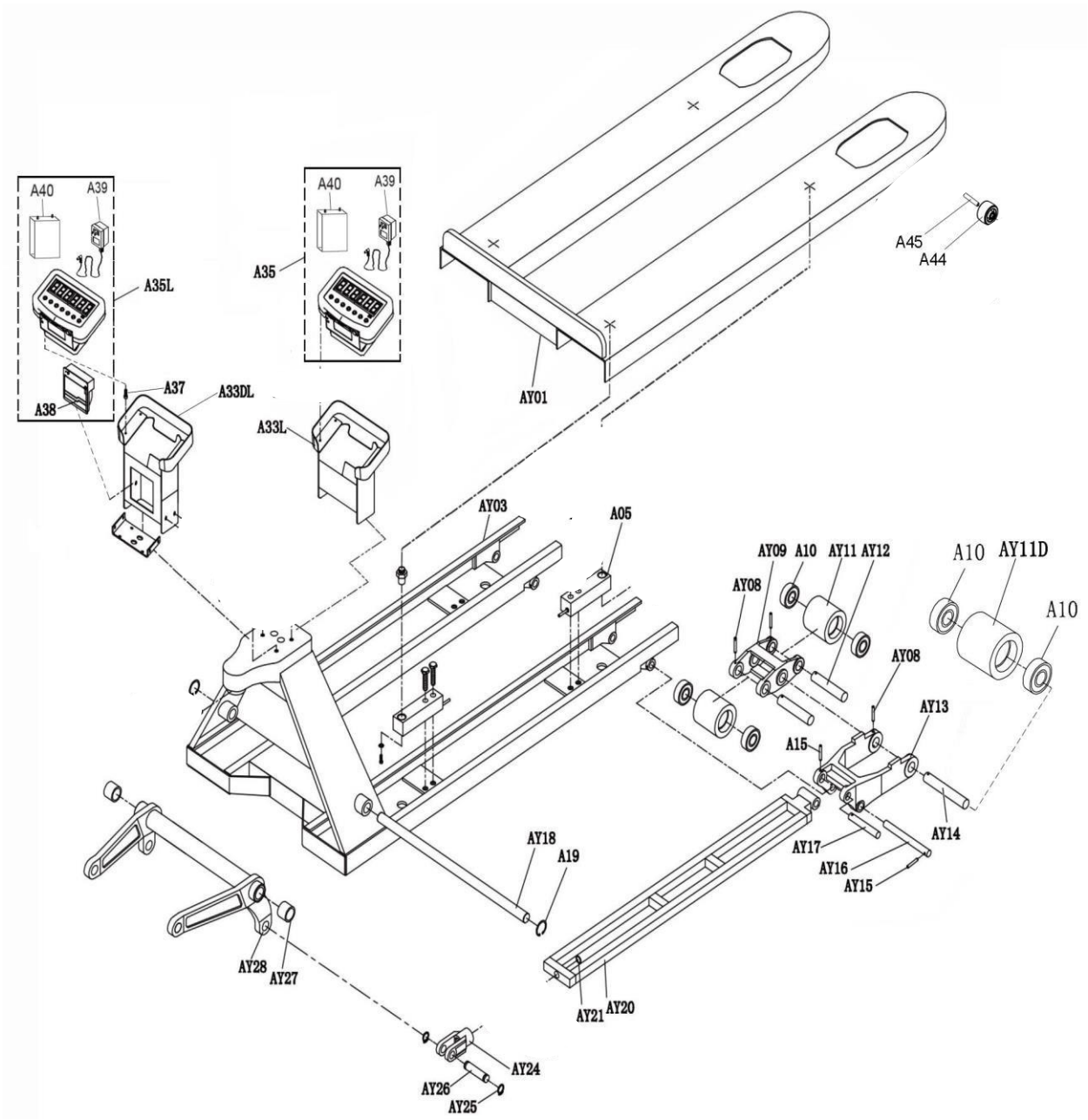

Copyright Pramac Group, All Rights Reserved

Truck chasis parts

No	New P/N	PR CODE	Description
AY01	20010301	#N/A	Weighing plate
AY03	20010303	#N/A	Frame
A05	20010305	**PCD00061**	The weighing sensor
AY08	20010308	#N/A	Spring pin
AY09	20010309	**PCD00062**	The movable wheel frame
A10	20010310	**PCD00063**	Bearing
AY11	32001028	**PCD00064**	Double loading wheel Ø70*70mm
AY11D	20010311-3	**PCD00065**	Single loading wheel Ø70*96mm
AY12	20010312	**PCD00066**	Wheel axle
AY13	20010313	**PCD00067**	The swing wheel frame
AY14	20010314	**PCD00068**	Shaft
AY15	20010315	**PCD00069**	Spring pin
AY16	20010316	**PCD00070**	Shaft
AY17	20010317	**PCD00071**	Pin shaft
AY18	20010318	**PCD00072**	The major axis
A19	20010319	#N/A	Ring
AY20	20010320	**PCD00073**	Pull rod
AY21	20010321	#N/A	The wire ring

Copyright Pramac Group, All Rights Reserved

Truck chasis parts

No	New P/N	PR CODE	Description
AY24	20010324	**PCD00074**	Fork joint
AY25	20010325	#N/A	Ring
AY26	20010326	**PCD00075**	Joint pin
AY27	20010327	#N/A	Bush
AY28	20010328	**PCD00076**	Connecting rod
A33L	20010333	**PCD00077**	Instrument box
A35	20010335	**PCD00078**	Weight meter (Inc. charger & battery)
A36	20010336	#N/A	Installed board
A38	20010338	**PCD00079**	Printer
A39	20010339	**PCD00080**	Charger
A40	20010340	**PCD00081**	Battery
A33DL	20010341	**PCD00082**	Instrument box with printer(Inc. item A36)
A35L	20010342	**PCD00083**	Weight meter with printer (Inc.charger, battery & printer)
A44	20010346	#N/A	Roller
A45	20010347	#N/A	Bushing

Copyright 2022 Pramac Group, All Rights Reserved

Pump parts serials from 2020.1.1

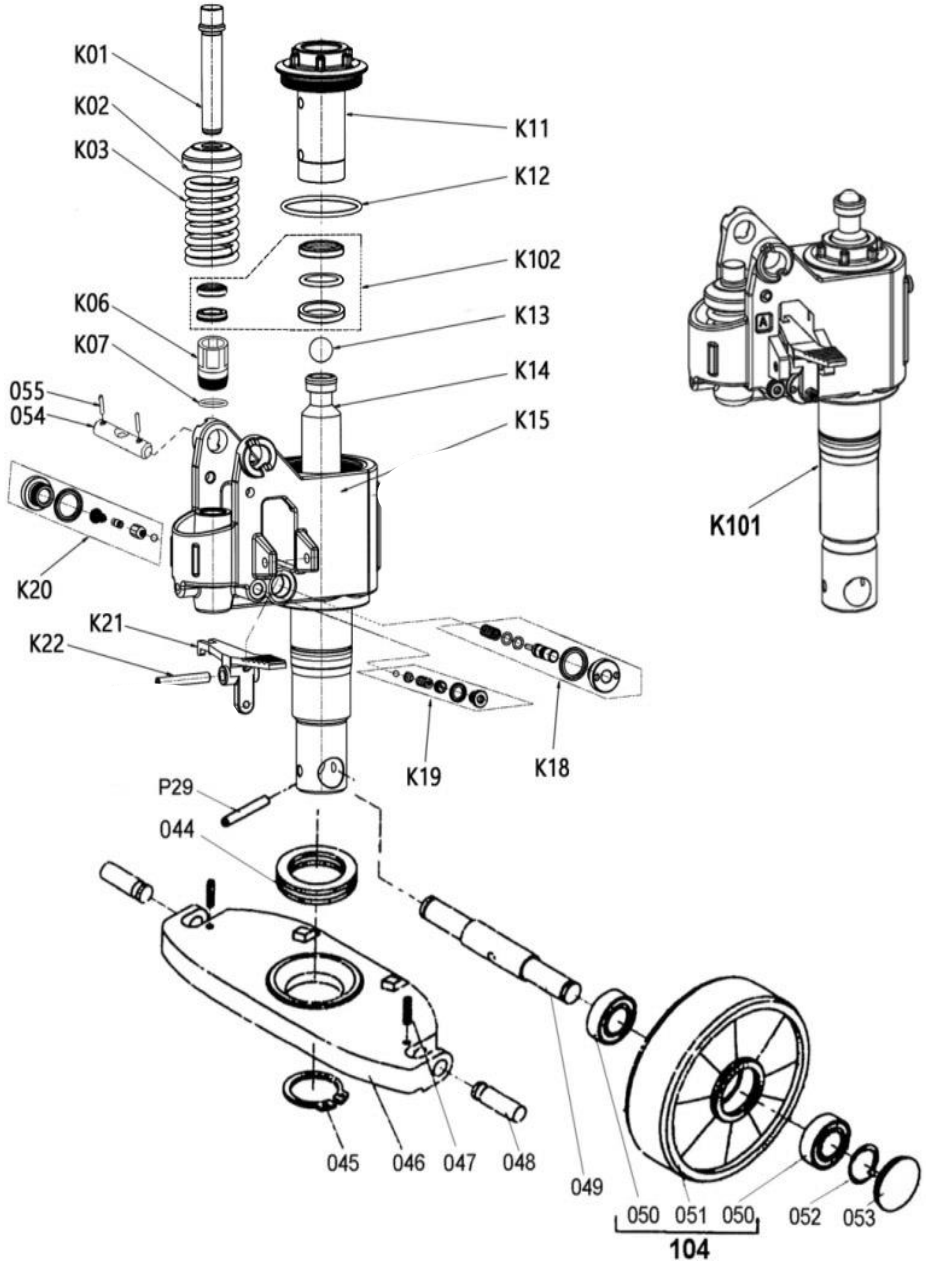

Copyright 2022 Pramac Group, All Rights Reserved

Pump parts serials from 2020.1.1

No	New P/N	PR CODE	Description
K101	17010107	**PCD00084**	New pump assy.
K01	17010201	**PCD00085**	Small pump core
K02	17010202	**PCD00086**	Cover of spring
K03	17010205	**PCD00087**	Big spring
K06	17010360	#N/A	Small cylinder
K07	17010361	#N/A	Copper gasket
K11	17010306	#N/A	Slide bushing Ø31.5 for 2.5T/3T
K12	17010305	#N/A	O-ring 69×2.65
K13	17010108	#N/A	Steel ball Φ19
K14	17010309	**PCD00088**	Piston rod Ø31.5 for 2.5T/3T
K15	17010213	#N/A	Pump body
K18	17010330	**PCD00089**	Relief valve
K19	17010329	**PCD00090**	Safety valve
K20	17010328	**PCD00091**	Check valve
K21	17010302	**PCD00092**	Lever plate
K22	17010303	**PCD00093**	Spring pin 8×50
K102	17010332	**PCD00094**	Pump seals kit Ø31.5 for 2.5T/3T
P29	17010112-1	**PCD00095**	Spring pin 8*50

Copyright 2022 Pramac Group, All Rights Reserved

Pump parts serials from 2020.1.1

No	New P/N	PR CODE	Description
044	17010113	**PCD00096**	Bearing 51111
045	17010115	#N/A	Snap ring 55
046	20010128	#N/A	Rhombus plate
047	20010129	**PCD00097**	Elastic pin
048	20010130	**PCD00098**	Movable pin
049	20010131	**PCD00099**	Tralling axle
050	20501016	**PCD00100**	Bearing
051	32002001	**PCD00101**	PU Steering wheel Ø180*50
052	20010134	#N/A	Retaining ring
53	20010135	**PCD00102**	Dust cover
054	20010136	**PCD00103**	Handle axle
055	20010137	**PCD00104**	Spring pin
104 (050~51)	32002001-3	**PCD00105**	Steering wheel assy (With bearing)

Copyright 2022 Pramac Group, All Rights Reserved